HMF EXPRESS

2501 Northchase Pkwy SE
Wilmington, NC 28405

"HH-SRD" STEEL DOOR

OUTSWING
"IMPACT"

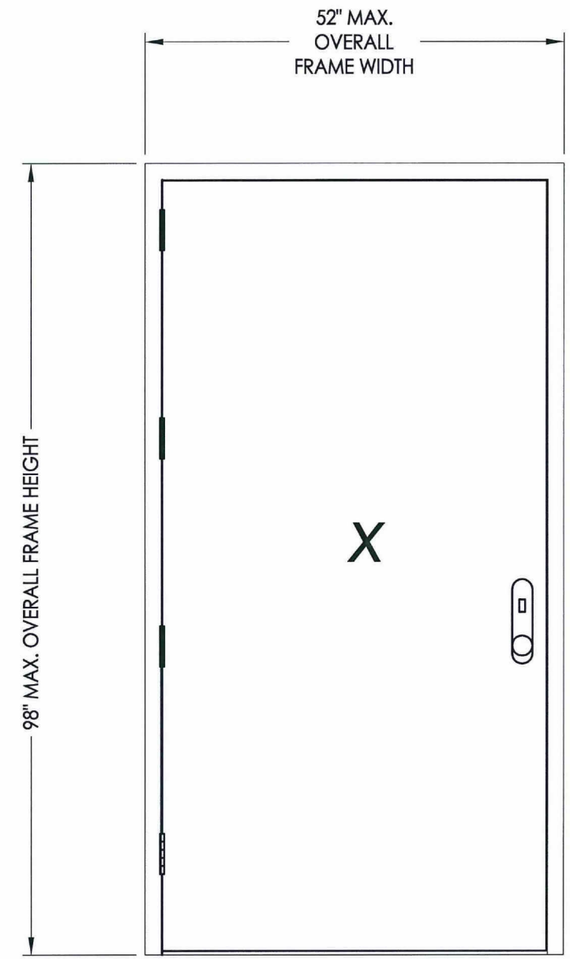

GENERAL NOTES

1. This product has been evaluated and is in compliance with the 5th Edition (2014) Florida Building Code (FBC) structural requirements including the "High Velocity Hurricane Zone" (HVHZ).
2. Product anchors shall be as listed and spaced as shown on details. Anchor embedment to base material shall be beyond wall dressing or stucco.
3. When used in the "HVHZ" this product complies with Section 1626 of the Florida Building Code and does not require an impact resistant covering.
4. When used in areas outside of the "HVHZ" requiring wind borne debris protection this product complies with Section 1609.1.2 of the FBC and does not require an impact resistant covering. This product meets missile level "D" and includes Wind Zone 4 as defined in ASTM E1996 and Section 1609.1.2.2 of the FBC.
5. Site conditions that deviate from the details of this drawing require further engineering analysis by a licensed engineer or registered architect.
6. This product meets the water infiltration requirements for the "HVHZ".
7. All steel shall be protected as specified in Section 2222.6 of the FBC.

TABLE OF CONTENTS

SHEET#	DESCRIPTION
1	Typical elevations, design pressures, & general notes
2	Door panel details
3	Horizontal cross sections
4	Vertical cross sections
5	Anchoring details
6	Bill of materials and components

MAX. OVERALL DIMENSION	DESIGN PRESSURE (PSF)	
	POSITIVE	NEGATIVE
52.0" X 98.0"	+47.0	-47.0

L. F. SCHMIDT LICENSE No. 43409 STATE OF FLORIDA PROFESSIONAL ENGINEER

9-1-15

Documents Prepared By:
Lyndon F. Schmidt
P.E. No. 43409

RW BUILDING CONSULTANTS, INC.
P.O. Box 230, Valrico, FL 33595
Phone No.: 813.659.9197
FBPE C.A. No. 9813

PRODUCT: HMF EXPRESSS

PART OR ASSEMBLY: TYPICAL ELEVATIONS, DESIGN PRESSURES & GENERAL NOTES

REVISIONS

NO.	DATE	BY

DATE: 8/31/15
SCALE: N.T.S.
DWG. BY: JK
CHK. BY: LFS
DRAWING NO.: FL-18506.3
SHEET 1 OF 6

© 2015 R.W. BUILDING CONSULTANTS INC.

R:\Clients\HMF Express PERMANENT\FL -\C - Drawings\FL XXXX (2014)\FL-18506.1-4.dwg, FL-16437.3

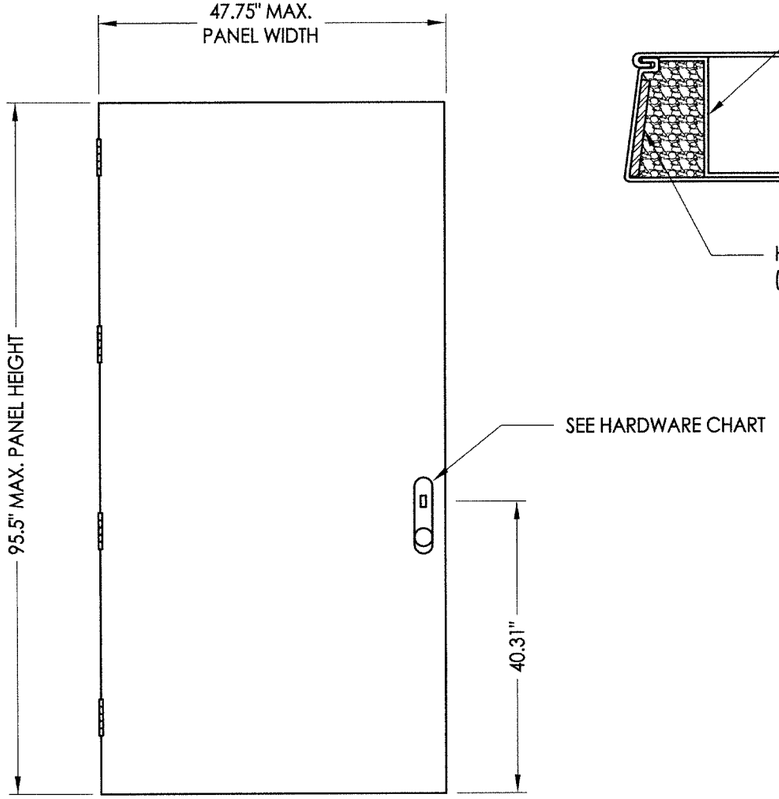

1 **OPAQUE STEEL DOOR PANEL**

STEEL DOOR SKIN: 18 GA. A60 GALV. (min. 0.047" THK. , Fy = 36,800 psi min.)
CORE MATERIAL: EPS Foam (Polystyrene - 1.0 PCF Min. Density)

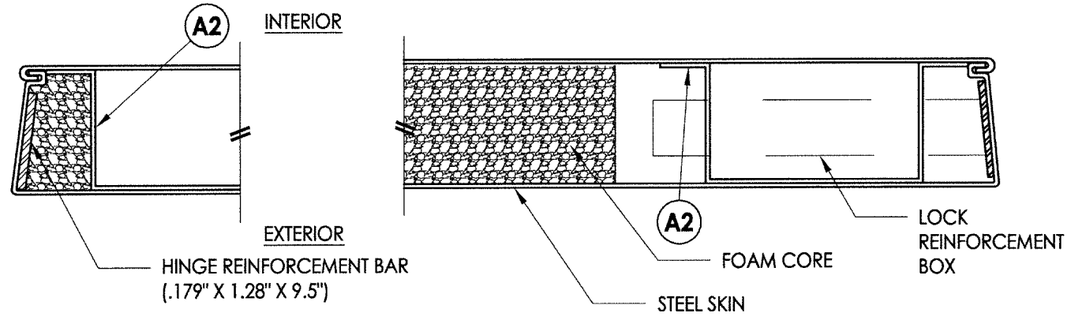

2/2 **HORIZONTAL CROSS SECTION**

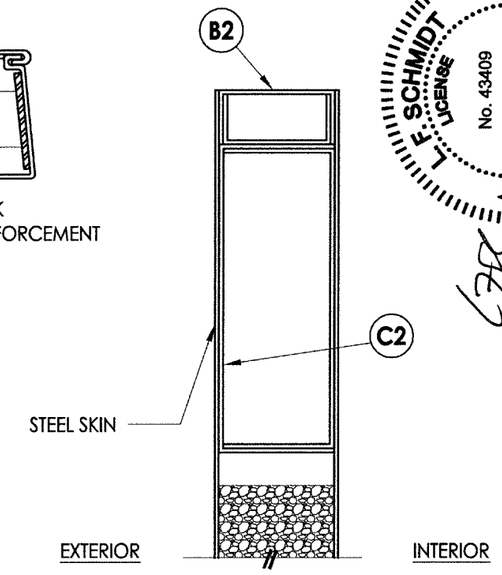

HARDWARE CHART	
MANUFACTURER	**MODEL**
SCHLAGE	**LOCK: D-Series** **DEADBOLT: D100**
SCHLAGE	**MORTISE LOCK: L9457 w/ Deadbolt**
VON DUPRIN	**LOCK: 9975 Panic Exit Device w/ Mortise Lock (575 Strike Plate)**
VON DUPRIN	**LOCK: 98NL Panic Exit Device (499 Strike Plate)**

NOTE: Panic exit device for use on one active panel only.

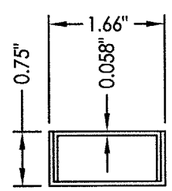

B2 **CHANNEL BOTTOM REINFORCEMENT**
A60 Galv. Steel

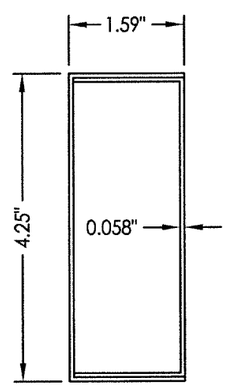

C2 **BOX CHANNEL TOP REINFORCEMENT**
A60 Galv. Steel

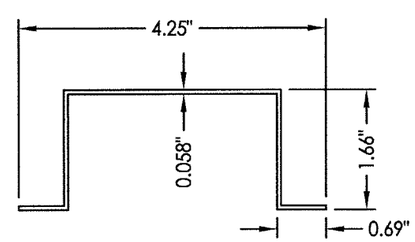

A2 **RIB STIFFENER**
A60 Galv. Steel

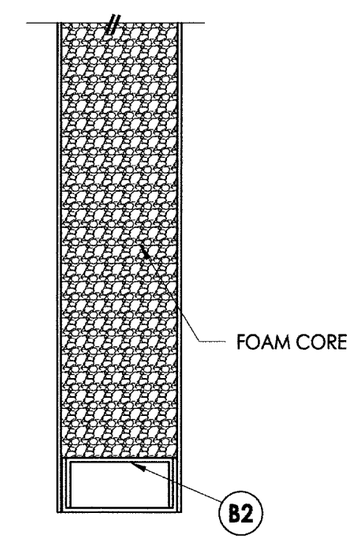

1/2 **VERTICAL CROSS SECTION**

STATE OF FLORIDA
L. F. SCHMIDT
LICENSE
No. 43409
PROFESSIONAL ENGINEER

Documents Prepared By:
Lyndon F. Schmidt
P.E. No. 43409

RW BUILDING CONSULTANTS, INC.
P.O. Box 230, Valrico, FL 33595
Phone No.: 813.659.9197
FBPE C.A. No. 9813

PRODUCT: HMF EXPRESSS

PART OR ASSEMBLY: DOOR PANEL DETAILS

NO.	DATE	REVISIONS	BY

DATE: 8/31/15
SCALE: N.T.S.
DWG. BY: JK
CHK. BY: LFS
DRAWING NO.: FL-18506.3
SHEET 2 OF 6

© 2015 R.W. Building Consultants Inc.

R:\Clients\HMF Express PERMANENT\FL -\C - Drawings\FL XXXX (2014)\FL-18506.1-4.dwg, 2.3

NOTES:
1. Spot weld anchor bracket to frame:
   2 welds per flange (4 total per bracket).

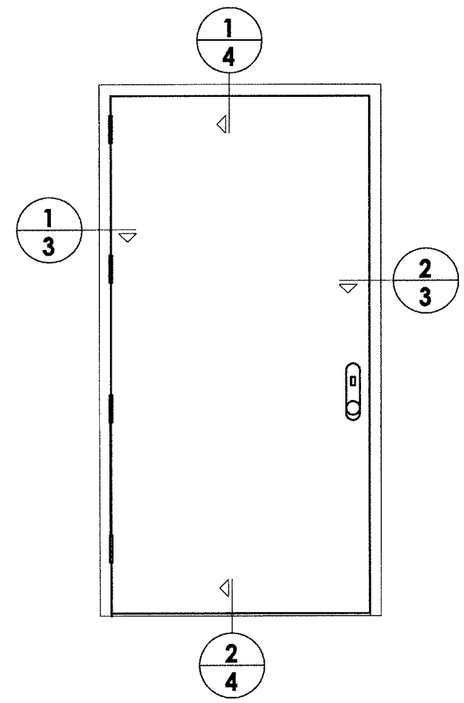

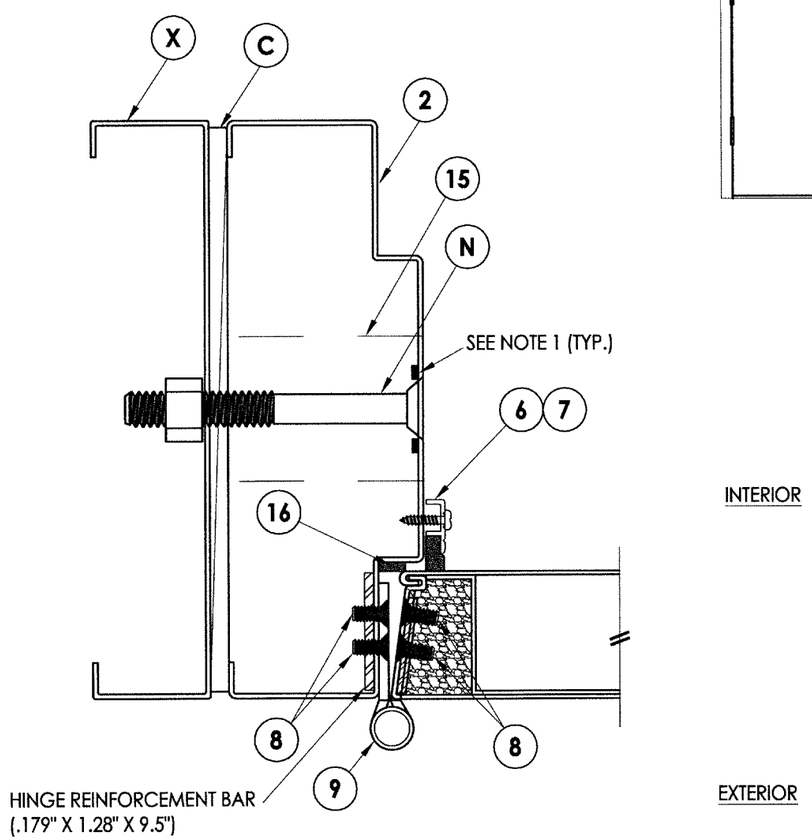

1/3 **HORIZONTAL CROSS SECTION**
Steel stud construction

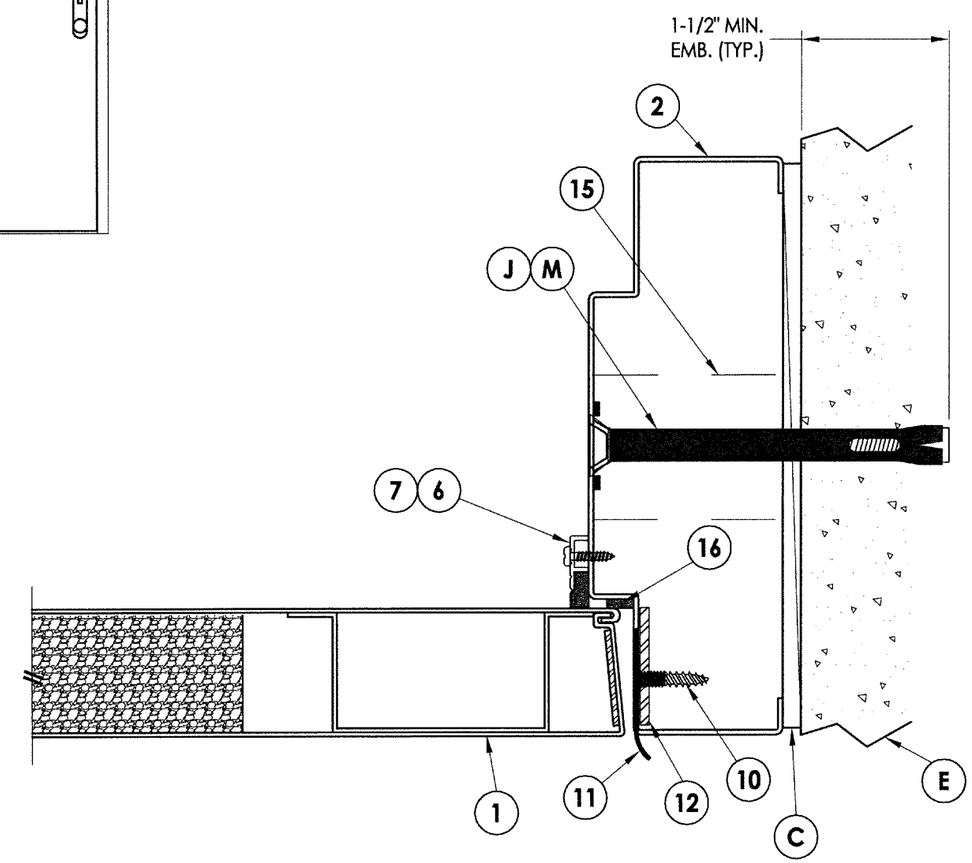

2/3 **HORIZONTAL CROSS SECTION**
Direct to masonry construction

L. F. SCHMIDT
LICENSE
No. 43409
STATE OF FLORIDA
PROFESSIONAL ENGINEER

9-1-15

Documents Prepared By:
Lyndon F. Schmidt
P.E. No. 43409

RW
BUILDING CONSULTANTS, INC.
P.O. Box 230, Valrico, FL 33595
Phone No.: 813.659.9197
FBPE C.A. No. 9813

PRODUCT: HMF EXPRESSS

PART OR ASSEMBLY: HORIZONTAL CROSS SECTIONS

NO.	DATE	REVISIONS	BY

DATE: 8/31/15
SCALE: N.T.S.
DWG. BY: JK
CHK. BY: LFS
DRAWING NO.: FL-18506.3
SHEET 3 OF 6

© 2015 R.W. Building Consultants Inc.

R:\Clients\HMF Express PERMANENT\FL -\C - Drawings\FL XXXX (2014)\FL-18506.1-4.dwg, 3.3

NOTES:
1. Spot weld anchor bracket to frame:
   2 welds per flange (4 total per bracket).

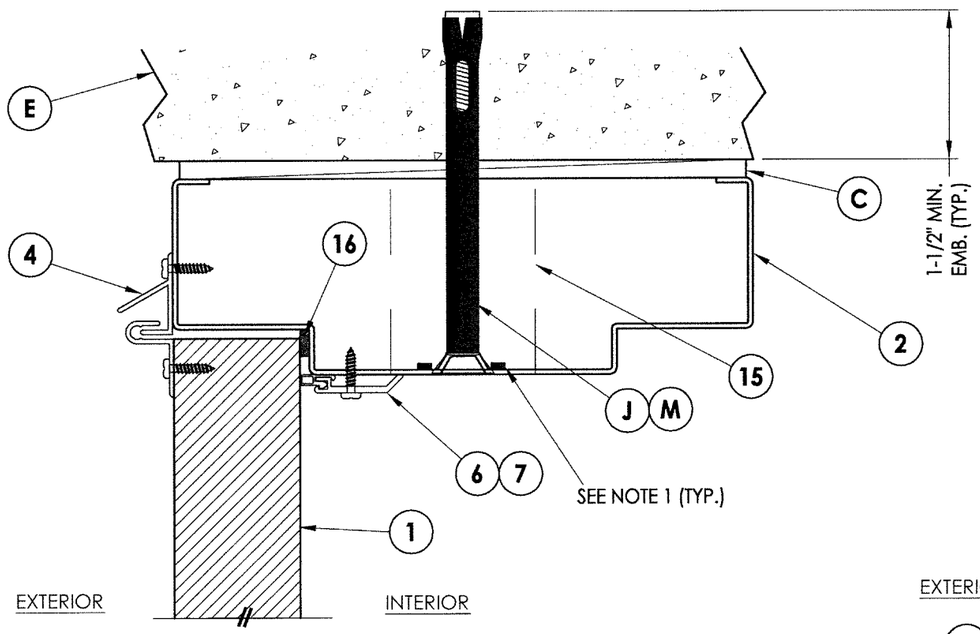

1/4 **VERTICAL CROSS SECTION**
Direct to masonry construction

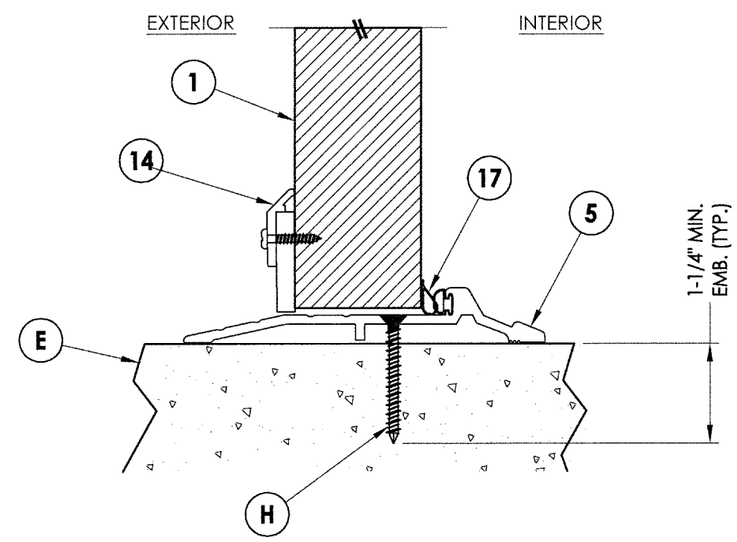

2/4 **VERTICAL CROSS SECTION**
Concrete sill

L. F. SCHMIDT
LICENSE
No. 43409
STATE OF FLORIDA
PROFESSIONAL ENGINEER

Documents Prepared By:
Lyndon F. Schmidt
P.E. No. 43409

RW BUILDING CONSULTANTS, INC.
P.O. Box 230, Valrico, FL 33595
Phone No.: 813.659.9197
FBPE C.A. No. 9813

PRODUCT: HMF EXPRESSS

PART OR ASSEMBLY: VERTICAL CROSS SECTIONS

NO.	DATE	REVISIONS	BY

DATE: 8/31/15
SCALE: N.T.S.
DWG. BY: JK
CHK. BY: LFS
DRAWING NO.: FL-18506.3
SHEET 4 OF 6

© 2015 R.W. BUILDING CONSULTANTS INC.

R:\Clients\HMF Express PERMANENT\FL -\C - Drawings\FL XXXX (2014)\FL-18506.1-4.dwg, 4:3

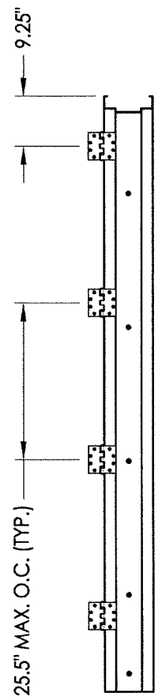

HINGE JAMB

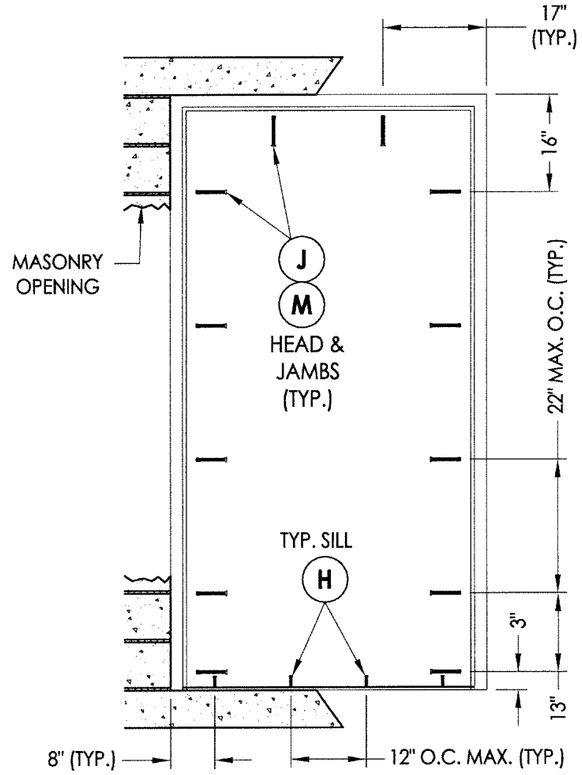

FRAME ANCHORING
Direct to Masonry

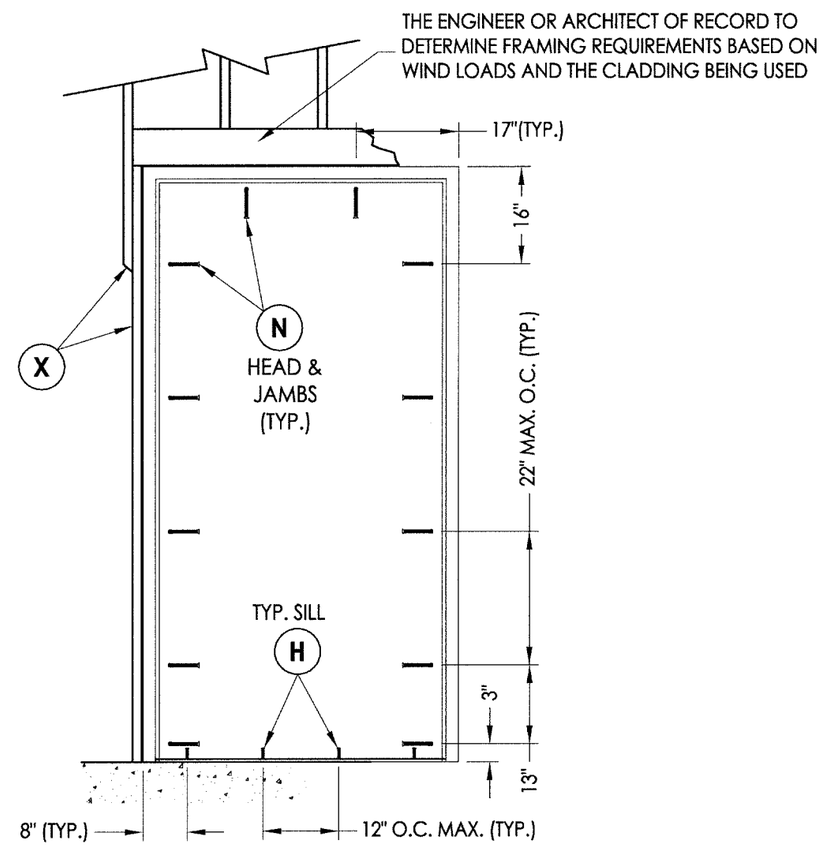

FRAME ANCHORING
Steel Stud

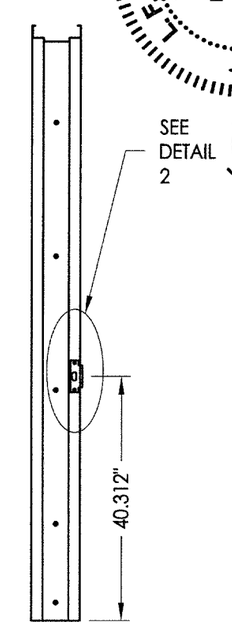

STRIKE JAMB

CONCRETE ANCHOR NOTES:

1. *Concrete screw locations may be adjusted to maintain a minimum 1" edge distance to mortar joints. If concrete screw locations noted as "MAX. O.C." must be adjusted to maintain the minimum edge distance to mortar joints, additional concrete screws may be required to ensure the maximum on center dimension is not exceeded.*
2. *Concrete anchor table:*

ANCHOR TYPE	ANCHOR LOCATION	ANCHOR SIZE	MANUFACTURER	MIN. EDGE DISTANCE	MIN. EMBEDMENT
CONCRETE ANCHOR SCREW	HEAD / JAMBS	3/8"	LDT TAPCON® (ITW BUILDEX)	3"	1-1/2"
	SILL	1/4"	TAPCON® (ITW BUILDEX) ULTRACON® (ELCO) CRETE-FLEX® (ELCO) TAPPER+® (POWERS)	2-1/2"	1-1/4"
CONCRETE SLEEVE ANCHOR	HEAD / JAMBS	3/8"	DYNABOLT SLEEVE ANCHOR® (ITW REDHEAD)	2-1/4"	1-1/2"

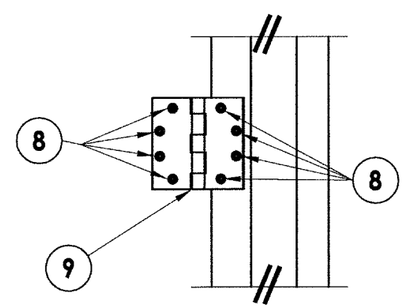

HINGE DETAIL

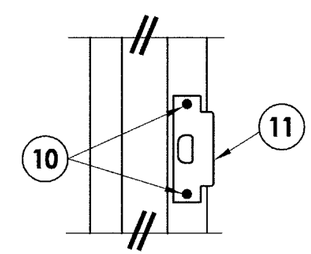

DETAIL 2

L. F. SCHMIDT LICENSE No. 43409 STATE OF FLORIDA PROFESSIONAL ENGINEER

Documents Prepared By:
Lyndon F. Schmidt
P.E. No. 43409

RW BUILDING CONSULTANTS, INC.
P.O. Box 230, Valrico, FL 33595
Phone No.: 813.659.9197
FBPE C.A. No. 9813

PRODUCT: HMF EXPRESSS

PART OR ASSEMBLY: ANCHORING DETAILS

NO.	DATE	BY

REVISIONS

DATE: 8/31/15
SCALE: N.T.S.
DWG. BY: JK
CHK. BY: LFS
DRAWING NO.: FL-18506.3
SHEET 5 OF 6

© 2015 R.W. BUILDING CONSULTANTS INC.

R:\Clients\HMF Express PERMANENT\FL -\C - Drawings\FL XXXX (2014)\FL-18506.1-4.dwg, 5.3

BILL OF MATERIALS

ITEM #	DESCRIPTION	MATERIAL
C	1/4" MAX. SHIM SPACE	-
E	MASONRY - 3,000 PSI MIN. CONCRETE CONFORMING TO ACI 301 OR HOLLOW BLOCK (GROUT FILLED) CONFORMING TO ASTM C90	CONCRETE
H	1/4" X 1-3/4" PFH CONCRETE SCREW (SEE CONCRETE ANCHOR TABLE)	STEEL
J	3/8" X 5" PFH DYNABOLT SLEEVE ANCHOR (SEE CONCRETE ANCHOR TABLE)	STEEL
M	3/8" X 5" LDT TAPCON CONCRETE SCREW (SEE CONCRETE ANCHOR TABLE)	STEEL
N	3/8" X 5" BOLT (ASTM A307) W/ NUT AND WASHER	STEEL
X	STEEL STUD (14 GA, Fu = 50 ksi, Fy = 33 ksi)	STEEL
1	STEEL DOOR PANEL	-
2	HOLLOW METAL FRAME (HEAD AND JAMB) - 16GA (0.058" THK)	STEEL
5	THRESHOLD (PEMKO #179AV)	ALUM
6	PERIMETER GASKET (PEMKO #312CR)	-
7	PERIMETER GASKET (PEMKO #315CR)	-
8	.210" X .525" SELF TAP FH SCREW	STEEL
9	HINGE 4.5" X 4.5"	STEEL
10	#12-24 x 1.0" COMBINATION MACHINE / WOOD SCREW	STEEL
11	LATCH STRIKE	STEEL
12	REINFORCEMENT (LOCK BOX)	STEEL
13	DOOR GASKET (PEMKO #347A / 68AR)	-
14	DOOR SWEEP (PEMKO #368CN)	-
15	ANCHOR BRACKET	A60 GALV.
16	WEATHERSTRIPPING TAPE	NEOPRENE
17	PERIMETER GASKET (PEMKO #S88)	-

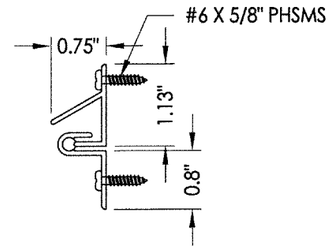

13 DOOR GASKET

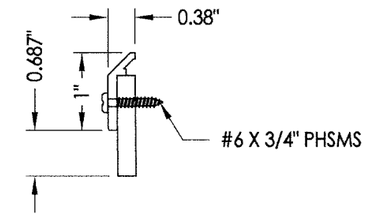

14 DOOR SWEEP

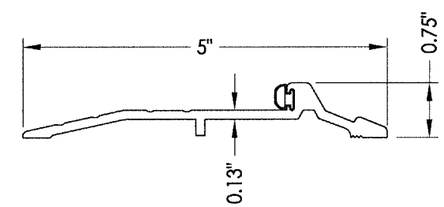

5 THRESHOLD

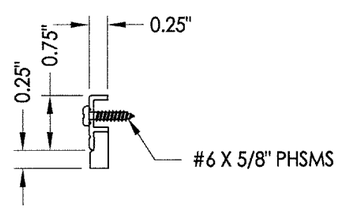

6 PERIMETER GASKETING

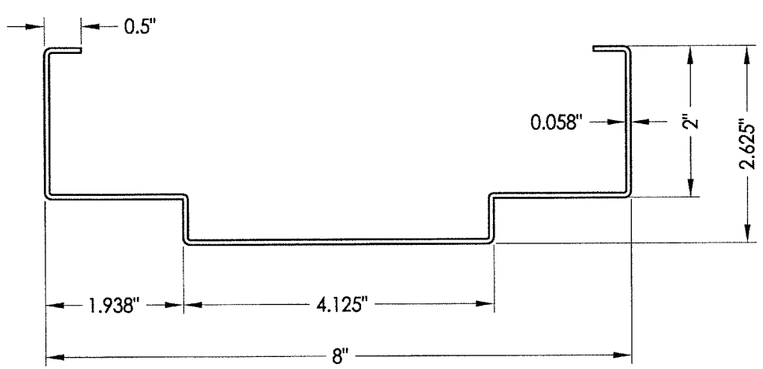

2 HOLLOW METAL FRAME
Head and jamb

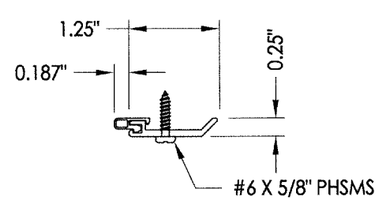

7 PERIMETER GASKETING

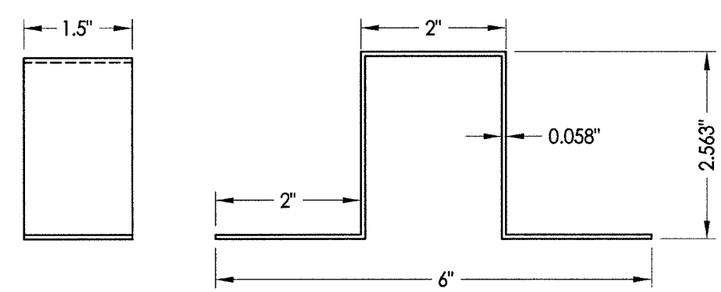

15 ANCHOR BRACKET

Documents Prepared By:
Lyndon F. Schmidt
P.E. No. 43409

R.W. BUILDING CONSULTANTS, INC.
P.O. Box 230, Valrico, FL 33595
Phone No.: 813.659.9197
FBPE C.A. No. 9813

L. F. SCHMIDT LICENSE No. 43409 STATE OF FLORIDA PROFESSIONAL ENGINEER

PRODUCT: HMF EXPRESSS

PART OR ASSEMBLY: BILL OF MATERIALS & COMPONENTS

NO.	DATE	REVISIONS	BY

DATE: 8/31/15
SCALE: N.T.S.
DWG. BY: JK
CHK. BY: LFS
DRAWING NO.: FL-18506.3
SHEET 6 OF 6

© 2015 R.W. BUILDING CONSULTANTS INC.

R:\Clients\HMF Express PERMANENT\FL -\C - Drawings\FL XXXX (2014)\FL-18506.1-4.dwg, 6.3